www.jdvalve.co.kr

JEONGDO

Concentric Butterfly Valve **PS Series**

Jeongdo Machinery is developing superior quality, top performance, reliable products for the future of the valve industry in Korea.

JEONGDO
Machinery Co., Ltd.

Jeongdo Machinery is...

Jeongdo Machinery was established in 1990 and specializes in industrial butterfly valves. Since opening, Jeongdo Machinery Co has been supplying butterfly valves and operators such as gearboxes and BLDC Motor actuators to domestic and overseas buildings including but not limited to: apartments, airports, plants, factories, and industrial facilities.

Contents

About Jeongdo 06

Certification 07

Concentric Butterfly Valve (PS Series) 09

- General, Specification, Material 10
- Design & Construction 11
- Features 12
- Wafer Type Butterfly Valve (PSW) 14
- Wafer Type Aluminum Butterfly Valve (PSW10-2) 16
- Lugged Type Butterfly Valve (PSL) 17
- Grooved Type Butterfly Valve (PSG) 18
- Butterfly Valve for fire-fighting piping 19
- Semi-Lugged Type Butterfly Valve (PSJ) 20
- Wafer Type Butterfly Valve for Water (PSW) 21
- PTFE Lined Seat Butterfly Valve (PSW10-173) 22
- PTFE Seat Butterfly Valve (PSW10-164) 23
- Pneumatic Actuator Butterfly Valve 24
- Electric Actuator Butterfly Valve 25
- Other Concentric Butterfly Valves 26
- Bolt & Nut for Valve Connection 27
- Installation 28
- Cv (Flow Coefficient), Seat Material Character 29

Product Code 31

Long history, expertise, select engineering.

Introduction

Every product at Jeongdo Machinery is produced under the philosophy that commitment to quality is the top priority. As a KS (Korean Industrial Standards), ISO 9001 certified and KTC Q-mark business, we constantly strive to improve our quality management systems to reach the target of zero defects. Additionally, through research and development efforts, we continuously endeavor to produce higher-quality lower-priced products. Our fast delivery and prompt A/S response system ensures reduction in delays of construction plans for our customers. Jeongdo Machinery Co., Ltd. is committed to holistic excellence which includes premiere technological development, quality improvement, production management, sales, and A/S under the goal of being the leading global provider of industrial butterfly valves. Thank You

Jeongdo Machinery Co., Ltd. All Employees

JEONGDO
Machinery Co., Ltd.

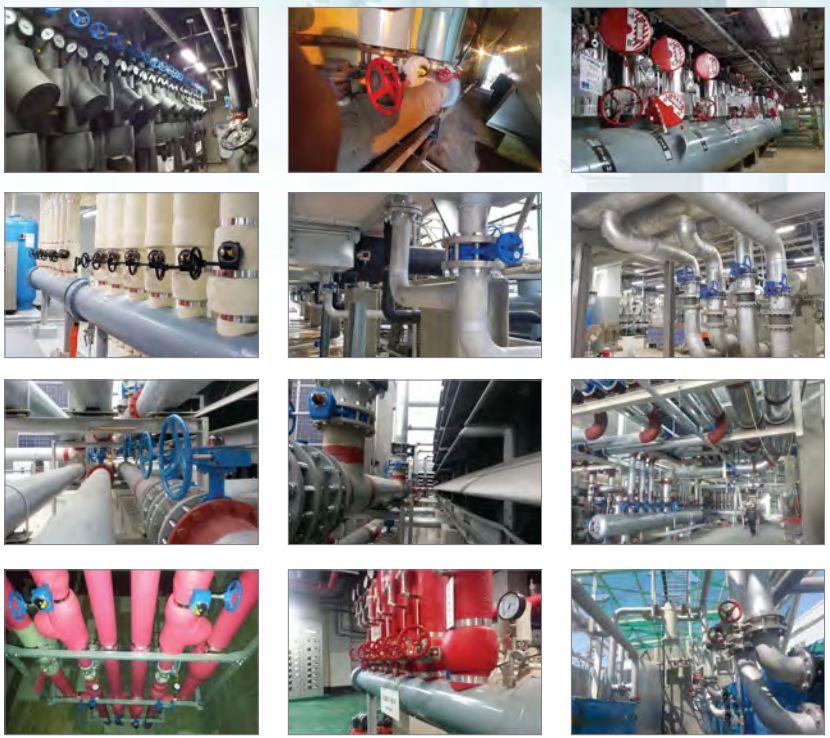

Long history, expertise, select engineering.

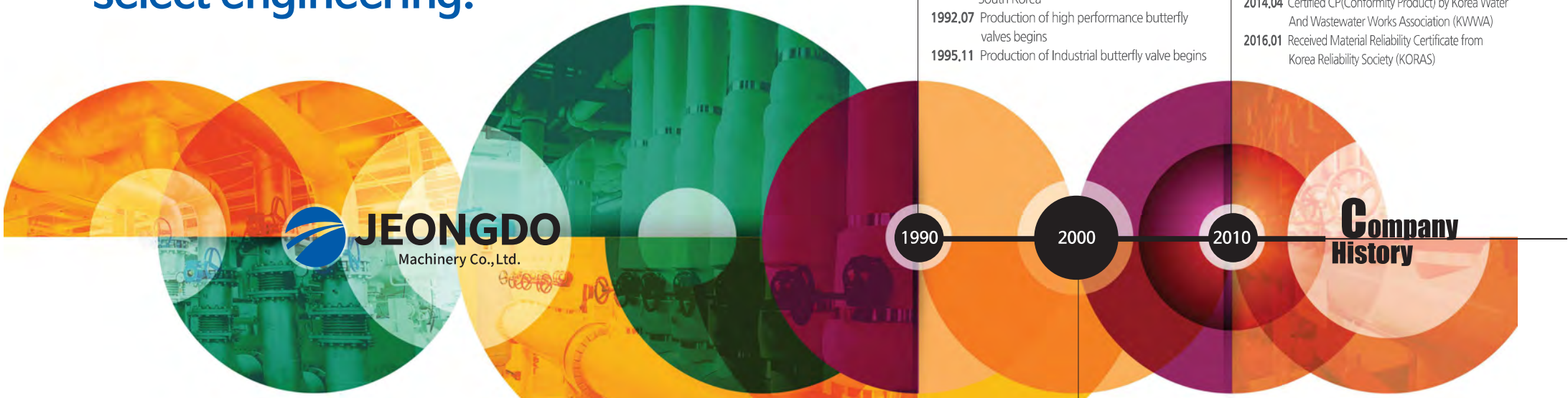

Information

· **CEO :** Jungho Nam · **Address :** 121 Hwanggeum 2-ro, Yangchon-eup, Gimpo-si, Gyeonggi-do, Korea
· **Date of establishment :** July 1990 · **Homepage :** www.jdvalve.co.kr
· **TEL :** 031-986-4309, FAX: 031-986-4308 · **E-mail :** jeongdo@jdvalve.co.kr

History

1990

1990.07 Jeongdo Co., Ltd. is established in Seoul, South Korea
1992.07 Production of high performance butterfly valves begins
1995.11 Production of Industrial butterfly valve begins

2000

2000.01 ISO 9001 Certification obtained
2000.05 Jeongdo Machinery Co., Ltd. is established
2002.02 KS B 2813 (50mm~300mm) Certification obtained
2004.05 ISO 9001:2000 Certification obtained
2004.06 Certified Venture Business by Korea Ministry of SMEs and Startups
2004.10 Certified INNO-BIZ by Korea Ministry of SMEs and Startups
2005.09 Grooved Butterfly Valve production commences
2006.04 Designated Quality Assurance Company (Q-Mark) by Korea Testing Certification (KTC)
2007.01 Certified Venture Business by Korea Technology Finance Corporation (KIBO)
2007.11 Certified CLEAN Business Place by Korea Occupational Safety & Health Agency (KOSHA)
2008.04 Certified Parts and Material Reliability by Korea Agency for Technology and Standards (KATS)
2009.06 Designated High Quality Recommended Product by Incheon, Korea

2010

2010.07 R&D laboratory opens its doors
2011.01 ALDC12 body butterfly valve production begins
2012.10 Obtained KC(Korea Certification) from Korea Water And Wastewater Works Association (KWWA)
2013.01 Relocation to new Jeongdo Machinery Co., Ltd. factory (Gimpo-si, Gyeonggi-do, Korea)
2013.08 KS B 2813 (450mm~600mm) Certification obtained
2013.11 Received Presidential Commendation for the 39th National Quality Award
2014.04 Certified CP(Conformity Product) by Korea Water And Wastewater Works Association (KWWA)
2016.01 Received Material Reliability Certificate from Korea Reliability Society (KORAS)

JEONGDO
Machinery Co., Ltd.

Concentric Butterfly Valve

The Concentric Butterfly Valve is the most common industrial butterfly valve. The stem, seat and disc are arranged in the center of the valve body, enabling bidirectional sealing. This valve is mainly used for fluids at room temperature and low pressure (10K/16K/20K). It can be used for various fluids depending on the type of material comprising the parts.

Specification

Body Type			Wafer, Lugged, Grooved, Semi-Lugged, Flanged		
Size			32mm ~ 1600mm (1¼"~ 64")		
Pressure Rating	Nominal	Sealing (Max.)	10kgf/㎠	16kgf/㎠	20kgf/㎠
	Test	Sealing (x 1.1)	11kgf/㎠	17.6kgf/㎠	22kgf/㎠
		Shell (x 1.5)	15kgf/㎠	24kgf/㎠	30kgf/㎠
Temperature Range			-20℃ ~ 120℃ (-4℉ ~ 248℉)		
Fluid Velocity			3 m/s ~ 4 m/s		
Face to Face Dimension			KS B 2813 Series 46, API 609 Category A		
Flange Connection			KS/JIS 10K/16K/20K, ASME 150, PN 10/16		
Operator			Lever : 32mm ~ 150mm (1¼" ~ 6") Lever with Limit Switch : 32mm ~ 150mm (1¼" ~ 6") Gear Box(General, Lock, Chain) : 32mm ~1600mm (1¼"~ 64") Gear Box with Limit Switch(Embedded) : 32mm ~ 1600mm (1¼"~ 64") Gear Box with Limit Switch(Separated) : 32mm ~ 1600mm (1¼"~ 64") Electric Actuator : 32mm ~ 1600mm (1¼"~ 64") Pneumatic Actuator : 32mm ~ 1600mm (1¼"~ 64")		
General Application			Fresh Water, Sewage, Sea Water, Salt Water, Air, Vapour, Food, Medicine, Oils, Acids, Etc.		

Material

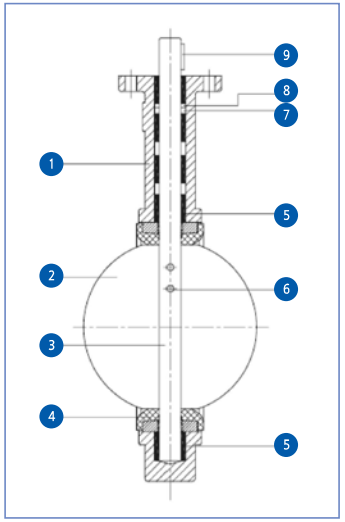

Part	Material		
	Description	KS	ASTM
1 Body	Cast Iron Ductile Iron Carbon Steel Stainless Steel Aluminum	GC200 GCD450 SCPH2 SSC13, SSC14 ALDC12	A126 Class B A536 65-45-12 A216 Gr WCB A351 CF8, CF8M A 383.0
2 Disc	Stainless Steel Al-Bronze	SSC13, SSC14 ALBC	A351 CF8, CF8M B148
3 Stem	Stainless Steel	STS304, STS420J2	ASTM A276 TYPE 304
4 Seat	Nitrile Butadiene Ethylene Propylene Teflon Teflon Lined	NBR EPDM PTFE EPDM+PTFE	NBR EPDM PTFE EPDM+PTFE
5 Bush	Plastic Bronze	NYLON66 BC6	- B62
6 Disc Pin	Stainless Steel	STS304 , STS316	ASTM A276 TYPE 304
7 V-Packing 8 O-ring	Nitrile Butadiene Ethylene Propylene Teflon	NBR EPDM PTFE	NBR EPDM PTFE
9 Key	Stainless Steel	SM45C	AISI 1045

Design & Construction

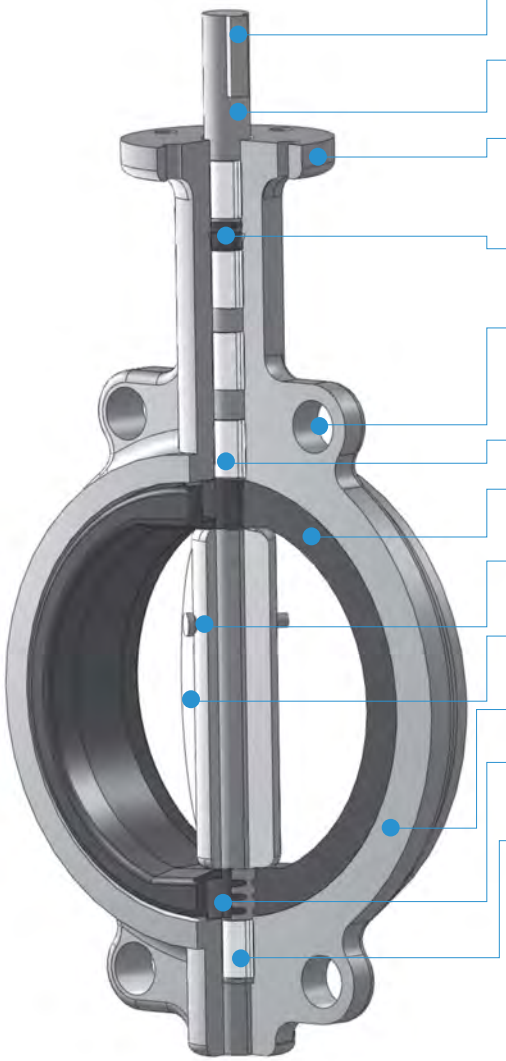

Key / Flat Head
Part through which operating torque is transmitted

Stem
The central axis of rotation for the disc

Upper Flange
Allows connection with bolt hole for operator repair

O-ring, V-packing
Mechanical gaskets to prevent axial leakage

Guide Hole (Flange Bolt)
The hole through which the flange bolt passes, serving as a guide for valve/flange alignment

Bush

Seat
Surface which seals with the disc

Taper Pin
Fixes stem and disc in place

Disc
Sealing mechanism that works with the seat

Body

Seat Back Ring
Support structure to prevent seat deformation

Lower Bush

Features

All PS Series(10K/16K/20K) have a 'Hard Back Ring Seat' that is adapted to high pressure.

The support structure is inserted in the seat and designed to maintain seat stability. It is mainly used in butterfly valves rated at 16K or higher because their seat surfaces have low levels of distortion, long life and high water tightness.

▼Hard Back Ring Seat

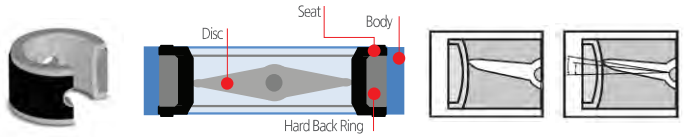

The Soft Seat is installed on a protruding body without a separate seat support structure. It is inexpensive but used for low pressure (under 10K), as its seat contact surface is widened due to an inflated/twisted form. Its lifespan is short, because of high seating torque.

▼Soft Seat

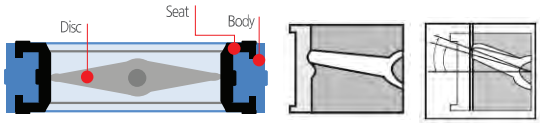

Minimum 4 Flange Bolt Guide Holes (Wafer Type)

4 or more flange bolt guide holes are provided to help central alignment of piping and valve upon installation.

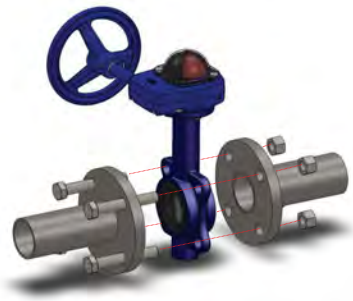

One Piece Stem

PS Series
One piece Stem

Good structure to improve water tightness by reducing the amount of stem deformation

Competitors
Two piece Stem

. Stem deformation even at low pressures
. High risk of permanent stem deformation

All PS Series Butterfly Valves except for the PTFE Seat Butterfly Valve have a one piece stem, which enhances the water tightness and durability of the valve.

Disc Precision Casting / Precision Machining

Precision disc manufacturing improves watertight performance and reduces driving torque.

PS Series

Because disc is manufactured through precision casting, the surface is uniform and clean. Due to the semi-circular process of the disc outer surface, seating torque is small

Competitors

Disc is made by sand casting, resulting in a rough surface and an imprecise outer diameter. Seating torque is high and it is difficult to maintain high pressure.

Concentric Butterfly Valve PS Series

Wafer Type Butterfly Valve

10K/16K/20K/ASME 150 (PSW)

Resilient Seat Butterfly Valve mainly used for various purposes in various industry sectors; certified by KS B 2813. Body is Wafer type. Body, disc, and seat can be composed of various materials depending on the fluid.

● Body Type	Wafer
● Size	32mm ~ 1600mm (1¼"~ 64")
● Max. Pressure	10/16/20kgf/㎠
● Temperature Range	-20℃ ~ 120℃ (-4℉ ~ 248℉)
● Flange Connection	KS/JIS 10K/16K/20K, ASME 150, PN 10/16

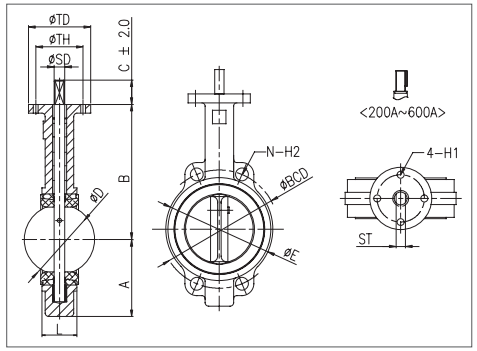

▣ Dimension (Bare Shaft, 32mm ~ 600mm)

(Unit: mm)

Valve Size		A	B	C	D	E	L	H1	TH	TD	SD 10K	SD 20K	ST	Connection 10K				Connection 20K				Weight (kg)
mm	inch													BCD	N	H2	Bolt	BCD	N	H2	Bolt	Bare Shaft
32	1¼	66	135	35	35	62	33	7	57	70	12.7		8	100	4	19	M16	100	4	19	M16	1.6
40	1½	70	150	35	42.4	76	33	7	57	77	12.7		8	105	4	19	M16	105	4	19	M16	2
50	2	80	161	35	53	100	43	7	57	77	12.7		8	120	4	19	M16	120	8	19	M16	2.5
65	2½	89	175	35	64.7	120	46	7	57	77	12.7		8	140	4	19	M16	140	8	19	M16	3.2
80	3	95	181	35	78.8	127	46	7	57	77	12.7		8	150	8	19	M16	160	8	23	M20	3.6
100	4	114	200	35	104	156	52	10.5	70	92	16		11	175	8	19	M16	185	8	23	M20	4.9
125	5	127	213	35	123	186	56	10.5	70	92	19		13	210	8	23	M20	225	8	25	M22	7
150	6	139	226	35	155.7	212	56	10.5	70	92	19		13	240	8	23	M20	260	12	25	M22	7.8
200	8	175	260	55	202.5	268	60	14.5	89	115	22		-	290	12	23	M20	305	12	25	M22	13.2
250	10	203	292	60	250.5	325	68	14.5	89	115	28.5		-	355	12	25	M22	380	12	27	M24	19
300	12	242	337	60	301	402	78	14.5	108	140	31.5		-	400	16	25	M22	430	16	27	M24	33
350	14	267	368	60	333.5	436	78	14.5	108	140	31.5		-	445	16	25	M22	480	16	33	M30	43
400	16	297	400	57	389.6	488	102	20.5	159	197	33	38	-	510	16	27	M24	540	16	33	M30	62
450	18	315	422	57	440.5	539	114	20.5	159	197	38	43	-	565	20	27	M24	605	20	33	M30	79
500	20	348	480	65	491.6	593	127	20.5	159	197	41	46	-	620	20	27	M24	660	20	33	M30	128
600	24	444	562	70	592.5	816	154	22	216	276	50.5	54	-	730	24	33	M30	770	24	39	M36	133

. Dimensions are subject to change without notice. / Over the size 700mm are available. / Face-to-Face dimensions(L) are in accordance with KS B 2813 Series 46 and API 609 category A.

※ Please contact us for specifications not listed above.

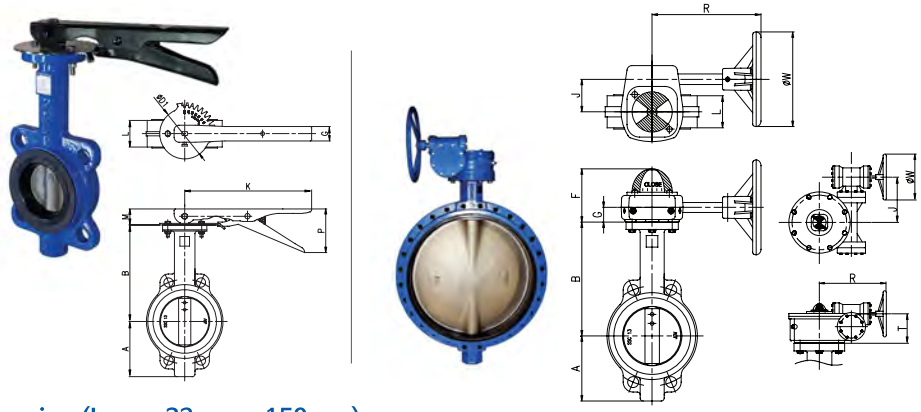

▣ Dimension (Lever, 32mm ~ 150mm)

(Unit: mm)

Valve Size		A	B	L	D1	G	P	K	M	Weight(Kg)	
mm	inch									Lever	Lever Type
32	1¼	66	135	33	94	28	65	203	33	0.1	1.7
40	1½	70	150	33	94	28	65	203	33	0.1	2.1
50	2	80	161	43	94	28	65	203	33	0.1	2.6
65	2½	89	175	46	94	28	65	203	33	0.1	3.3
80	3	95	181	46	94	28	65	203	33	0.1	3.7
100	4	114	200	52	104	30	90	263	33	0.2	5.1
125	5	127	213	56	104	30	90	263	33	0.5	7.5
150	6	139	226	56	104	30	90	263	33	0.5	8.3

. Dimensions are subject to change without notice. / Face-to-Face dimensions(L) are in accordance with KS B 2813 Series 46 and API 609 category A.

▣ Dimension (Gear Box, 32mm ~ 600mm)

(Unit: mm)

Valve Size		A	B	F	G	J	W	R	T	Weight (kg)	
mm	inch									Gear Box	Gear Box Type
32	1¼	66	135	84	23	51.6	150	172	-	1.5	3.1
40	1½	70	150	84	23	51.6	150	172	-	1.5	3.5
50	2	80	161	84	23	51.6	150	172	-	1.5	4
65	2½	89	175	84	23	51.6	150	172	-	1.5	4.7
80	3	95	181	84	23	51.6	150	172	-	1.5	5.1
100	4	114	200	84	23	51.6	150	172	-	1.5	6.4
125	5	127	213	84	23	51.6	150	172	-	1.5	8.5
150	6	139	226	84	23	51.6	150	172	-	1.5	9.3
200	8	175	260	84	33	51.6	150	172	-	3.5	16.7
250	10	203	292	102	33	59.7	250	236	-	3.5	22.5
300	12	242	337	112	39	80	285	239	39	11	44
350	14	267	368	112	39	80	285	239	39	25.3	68.3
400	16	297	400	-	55	180	400	260	140	34.8	96.8
450	18	315	422	-	55	180	400	260	140	34.8	113.8
500	20	348	480	-	55	180	400	260	140	34.8	162.8
600	24	444	562	-	74	230	400	350	170	51.3	184.3

. Dimensions are subject to change without notice. / Over the size 700mm are available. / Face-to-Face dimensions(L) are in accordance with KS B 2813 Series 46 and API 609 category A.

※ Please contact us for specifications not listed above.

Concentric Butterfly Valve PS Series

Wafer Type Aluminum Butterfly Valve

10K (PSW10-2)

Butterfly Valve made of the finest aluminum alloy (ALDC12). Body is light, corrosion-resistant and heat-resistant. It is used as a standard in countries with advanced valve technology, for general water pipe line less than 300mm and 10kgf/㎠. Comparing to 'Wafer Type Butterfly Valve', all parts are same except for the body material. The valve can be used for the various purposes such as general water, air, fire water, and so on. And the various operators such as Gear Box. Lever, Actuator, and so on can be used for the valve.

- **Body Type** | Wafer
- **Size** | 40mm ~ 300mm (1 ½"~ 12")
- **Max. Pressure** | 10kgf/㎠
- **Temperature Range** | -20℃ ~ 120℃ (-4℉ ~ 248℉)
- **Flange Connection** | KS/JIS 10K, ASME 150, PN 10

▣ Features

1. Lightweight

Valve Size		GC200 Weight(Kg)	ALDC12 Weight(Kg)	
mm	inch	"Gear Box Type"	"Gear Box Type"	Comparing to GC200
100	4	6.4	4.4	68%
200	8	16.7	11.7	70%

2. Excellent tensile strength

As a result of test by Korea Testing Certification (KTC), the tensile strength of ALDC12 is 239N/㎟, which is stronger than GC200(measurement method: refer to KS B 0802)

3. Streamlined appearance

4. Excellent in corrosion resistance

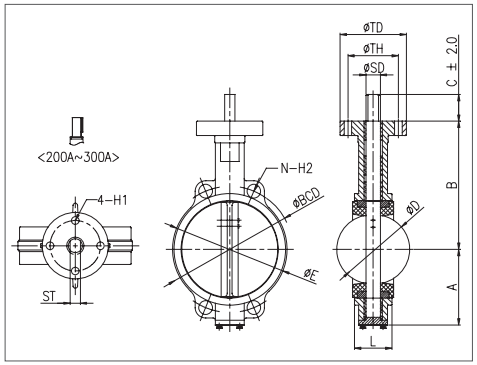

▣ Dimension (Bare Shaft, 50mm ~ 300mm)

(Unit: mm)

Valve Size		A	B	C	D	E	L	H1	TH	TD	SD	ST	Connection 10K				Weight (kg)		
mm	inch												BCD	N	H2	Bolt	Bare Shaft	Lever Type	Gear Box Type
50	2	85	148	35	53	100.4	43	7	57	77	12.7	8	120	4	19	M16	1.4	1.5	2.9
65	2½	90	155	35	64.7	113	46	7	57	77	12.7	8	140	4	19	M16	1.7	1.8	3.2
80	3	98	160	35	78.8	128	46	7	57	77	12.7	8	150	8	19	M16	1.7	1.8	3.2
100	4	110	178	35	104	159	52	10.5	70	92	16	11	175	8	19	M16	2.9	3.1	4.4
125	5	130	190	35	123	191	56	10.5	70	92	19	13	210	8	23	M20	4.3	4.8	5.8
150	6	140	205	35	155.7	219	56	10.5	70	92	19	13	240	8	23	M20	5.3	5.8	6.8
200	8	175	240	55	202.5	271	60	14.5	89	115	22	-	290	12	23	M20	8.2	-	11.7
250	10	210	270	60	250.5	334	68	14.5	89	115	28.5	-	355	12	25	M22	13.4	-	16.9
300	12	335	337	60	301	370	78	14.5	108	140	31.5	-	400	16	25	M22	23	-	34

. Dimensions are subject to change without notice. / Face-to-Face dimensions(L) are in accordance with KS B 2813 Series 46 and API 609 category A.

※ Please contact us for specifications not listed above.

Concentric Butterfly Valve PS Series

Lugged Type Butterfly Valve

10K/16K/20K (PSL)

The Lugged Type Resilient Seat Butterfly Valve is used for various purposes in various industry sectors. It features a tapping hole for bolts on the body and can provide dead-end service.

- **Body Type** | Lugged
- **Size** | 32mm ~ 1600mm (1¼"~ 64")
- **Max. Pressure** | 10/16/20kgf/㎠
- **Temperature Range** | -20℃ ~ 120℃ (-4℉ ~ 248℉)
- **Flange Connection** | KS/JIS 10K/16K/20K, ASME 150, PN 10/16

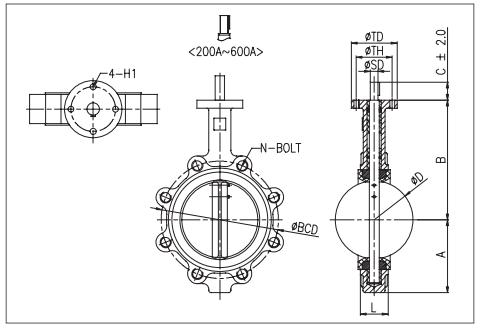

▣ Dimension (Bare Shaft, 50mm ~ 600mm)

(Unit: mm)

Valve Size		A 10K	A 20K	B 10K	B 20K	C	D	L	H1	TH	TD	SD	ST	Connection 10K					Connection 20K				
mm	inch													BCD	N	Bolt	Weight (kg) Bare Shaft	Weight (kg) Gear Box Type	BCD	N	Bolt	Weight (kg) Bare Shaft	Weight (kg) Gear Box Type
50	2	80	83	161	170	35	52.6	43	7	57	77	12.7	8	120	4	M16	3.2	4.7	120	8	M16	4.7	6.2
65	2½	89	94	175	181	35	64.3	46	7	57	77	12.7	8	140	4	M16	4.5	6	140	8	M16	6.5	8
80	3	95	101	181	189	35	78.8	46	7	57	77	12.7	8	150	8	M16	5	6.5	160	8	M20	7.7	9.2
100	4	114	116	200	193	35	104	52	10.5	70	92	16	11	175	8	M16	7.5	9	185	8	M20	8.7	10.2
125	5	127	129	213	207	35	123.3	56	10.5	70	92	19	13	210	8	M20	10	11.5	225	8	M22	11	12.5
150	6	139	146	226	232	35	155.7	56	10.5	70	92	19	13	240	8	M20	11	12.5	260	12	M22	14.2	15.7
200	8	175	174	260	259	55	202.4	60	14.3	89	115	22	-	290	12	M20	17.9	21.4	305	12	M22	22.4	25.9
250	10	203	205	292	300	60	250.4	68	14.3	89	115	28.5	-	355	12	M22	26.6	30.1	380	12	M24	33	36.5
300	12	242	244	337	342	60	301.5	78	14.3	108	140	31.5	-	400	16	M22	40	51	430	16	M24	50.4	61.4
350	14	267	267	368	376	45	333.3	78	14.3	108	140	31.5	-	445	16	M22	45	70.3	480	16	M30	59.6	84.9
400	16	309	321	400	404	56	389.6	102	20.6	159	197	33.1	-	510	16	M24	62	96.8	540	16	M30	71.2	106
450	18	309	360	422	428	56	440.5	114	20.6	159	197	38	-	565	20	M24	79	113.8	605	20	M30	87.5	122.3
500	20	353	385	480	483	64	591.6	127	20.6	159	197	41.1	-	620	20	M24	128	162.8	660	20	M30	142	176.8
600	24	460	466	580	571	70	592.5	154	22.2	216	276	50.6	-	730	24	M30	133	184.3	770	24	M36	155	206.3

. Dimensions are subject to change without notice. / Over the size 700mm are available. / Face-to-Face dimensions(L) are in accordance with KS B 2813 Series 46 and API 609 category A.

※ Please contact us for specifications not listed above.

Concentric Butterfly Valve PS Series

Grooved Type Butterfly Valve

(PSG)

The Grooved Type Resilient Seat Butterfly Valve is mainly for various purposes in various industry sectors, and can be mounted on seismic design piping. It features bidirectional sealing through patented design of Jeongdo Machinery Co., Ltd. and proven durability through its 'Material Reliability Certificate' awarded by the 'Korea Reliability Association'.

Body Type	Grooved
Size	50mm ~ 450mm (2" ~ 18")
Max. Pressure	20kgf/㎠
Temperature Range	-20℃ ~ 120℃ (-4℉ ~ 248℉)
Flange Connection	KS B 2822

▣ Features

1. **Body structure for no weld mounting**
   Tailor-made for seismic design pipeline.
2. **One piece stem and concentric structure**
   Excellent water tightness and bidirectional sealing
3. **Several patents and reliability verification through externally certified laboratories**

- Korean Intellectual Property Office
. Patent No. 10-0654245 The grooving type butterfly valve and its valve body manufacturing method
. Patent No. 10-1486916 Center type seat installation method of grooving type butterfly valve
. Utility Model Registration No. 20-0455462 Grooving Butterfly Valve

- Government task with Korea Institute of Machinery & Material (2014.07.01 ~ 2015.06.30)
. Set up assessment standard: RS-KORAS-KIMM-005(2015)
. Set up durability test equipment and verified its durability(10,000 cycle)
. Acquired certification of reliability: R-KORAS-2016-004, The Korean Reliability Society

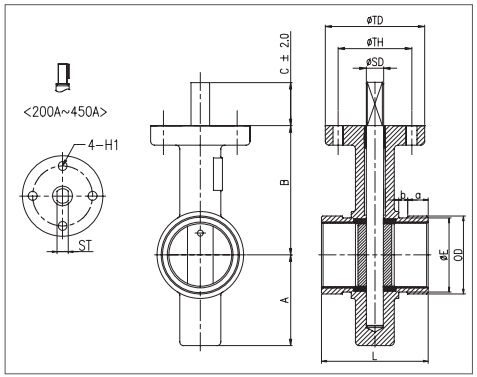

▣ Dimension (Bare Shaft, 50mm ~ 450mm)

(Unit: mm)

Valve Size		A	B	C	OD	E	L	H1	TH	TD	SD	ST	a	b	Weight (kg)	
mm	inch														Bare Shaft	Gear Box Type
50	2	70	100	35	60.5	57.2	81	7	57	77	12.7	8	16	8.7	2	3.5
65	2½	75	106	35	76.3	72.3	97	7	57	77	12.7	8	16	8.7	2	3.5
80	3	82	113	35	89.1	85	97	7	57	77	12.7	8	16	8.7	3	4.5
100	4	100	135	35	114.3	110	116	10.5	70	92	16	11	16	8.7	5	6.5
125	5	119	147	35	139.8	135.5	148	10.5	70	92	19	13	16	8.7	8	9.5
150	6	130	176	35	165.2	160.8	148	10.5	70	92	19	13	16	8.7	10	11.5
200	8	162	204	35	216.3	211.6	133	14.3	89	115	22.1	-	19	11.9	14	17.5
250	10	200	240	35	267.4	262.6	158.8	14.3	89	115	28.5	-	19	12.7	22	32.7
300	12	224	317	35	318.5	312.9	163.6	14.3	108	140	31.6	-	19	12.7	32	57.3
350	14	246	348	56	355.6	350	178	20.6	159	197	33.1	-	23.8	13.2	50	84.8
400	16	278	373	75	406.4	400.9	178	20.6	159	197	38	-	23.8	13.2	50	84.8
450	18	313	394	75	457.2	451.6	203	20.6	159	197	42.9	-	25.4	13.2	87	121.8

. Dimensions are subject to change without notice./ Face-to-Face dimensions(L) are in accordance with KS B 2813 Series 46 and API 609 category A.

※ Please contact us for specifications not listed above.

Concentric Butterfly Valve PS Series

Butterfly Valve for fire-fighting piping

10K/16K/20K (PSW)

Concentric Butterfly Valve with a limit switch embedded in or separated with operators. Jeongdo Machinery Co., Ltd. holds a utility model registration for its limit switch embedded gear box.

Body Type	Wafer, Lugged, Grooved
Size	32mm ~ 150mm (1 ¼"~ 6")
Max. Pressure	10/16/20kgf/㎠
Temperature Range	-20℃ ~ 120℃ (-4℉ ~ 248℉)
Flange Connection	KS/JIS 10K/16K/20K, ASME 150, PN 10/16

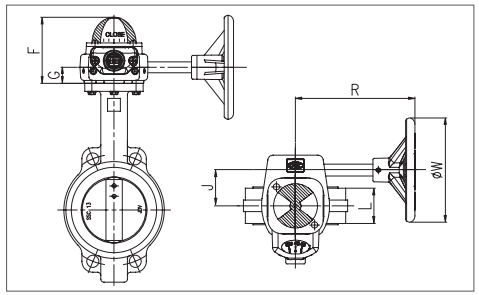

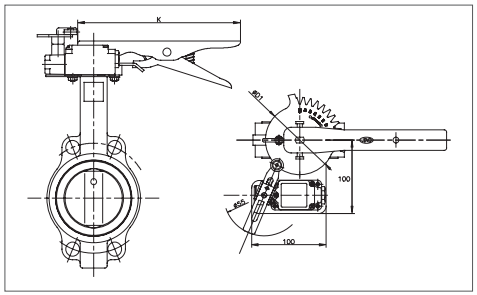

▣ Dimension (Lever/Gear Box, 50mm ~ 150mm)

(Unit: mm)

Valve Size		D1	G	P	K	J	R	W	H	F	Weight(kg)		
mm	inch										Bare Shaft	Lever Type	Gear Box Type
50	2	94	28	65	225	51.6	172	150	23	84	2.5	3	3.8
65	2½	94	28	65	225	51.6	172	150	23	84	3.2	3.7	4.5
80	3	94	28	65	225	51.6	172	150	23	84	3.6	4.1	4.9
100	4	104	30	90	285	51.6	172	150	23	84	4.9	5.4	6.2
125	5	104	30	90	285	51.6	172	150	23	84	7	7.5	8.3
150	6	104	30	90	285	51.6	172	150	23	84	7.8	8.3	9.1

. Dimensions are subject to change without notice. / Over the size 200mm are available. / Face-to-Face dimensions(L) are in accordance with KS B 2813 Series 46 and API 609 category A.

※ Please contact us for specifications not listed above.

Concentric Butterfly Valve PS Series

Semi-Lugged Type Butterfly Valve

10K (PSJ)

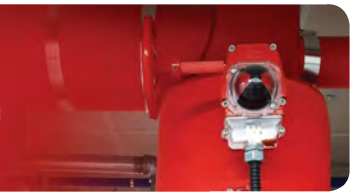

Butterfly Valve used for fire alarm valves. There is a screw(tab) on the valve body for attachment of an alarm valve. The Semi-Lugged Type Butterfly Valve has a default limit switch embedded gear box with a Jeongdo Machinery Co., Ltd. utility model registration.

- **Body Type** | Semi-Lugged
- **Size** | 65mm ~ 150mm (2½" ~ 6")
- **Max. Pressure** | 10kgf/㎠
- **Temperature Range** | 0℃ ~ 120℃ (32℉ ~ 248℉)
- **Flange Connection** | KS/JIS 10K

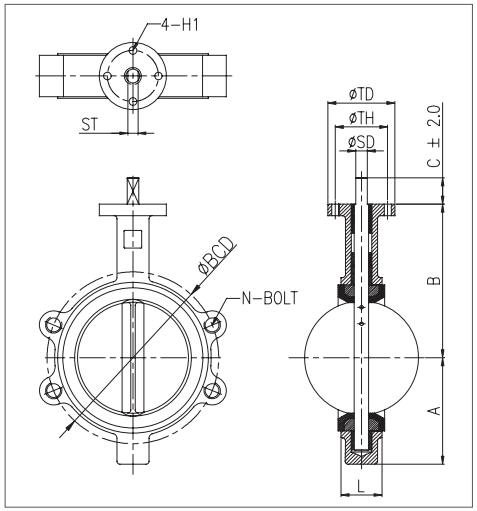

▣ Dimension (Bare Shaft, 65mm ~ 100mm)

(Unit: mm)

Valve Size		A	B	C	L	H1	TH	TD	SD	ST	Connection 10K			Weight (kg)	
mm	inch										BCD	N	Bolt	Bare Shaft	Gear Box Type
65	2½	80	161	35	43	7	57	77	12.7	8	120	4	M16	4	5.5
80	3	89	175	35	46	7	57	77	12.7	8	140	4	M16	4.1	5.6
100	4	95	181	35	46	7	57	77	12.7	8	150	8	M16	6	7.5
125	5	114	200	35	52	10.5	70	92	16	11	175	8	M16	8.1	9.6
150	6	127	213	35	56	10.5	70	92	19	13	210	8	M20	9.1	10.6

. Dimensions are subject to change without notice. / Face-to-Face dimensions(L) are in accordance with KS B 2813 Series 46 and API 609 category A.

※ Please contact us for specifications not listed above.

Concentric Butterfly Valve PS Series

Wafer Type Butterfly Valve for Water

10K/16K/20K (PSW)

Resilient Seat Butterfly Valve for water. The Wafer Type Butterfly Valve for Water is KC(Korea Certification Mark) certified and CP(Conformity Product) certified to use on water.

- **Body Type** | Wafer
- **Size** | 50mm ~ 250mm (2" ~ 10")
- **Max. Pressure** | 10/16/20kgf/㎠
- **Temperature Range** | 0℃ ~ 120℃ (32℉ ~ 248℉)
- **Flange Connection** | KS/JIS 10K/16K/20K, ASME 150, PN 10/16

▣ ALDC12 Body

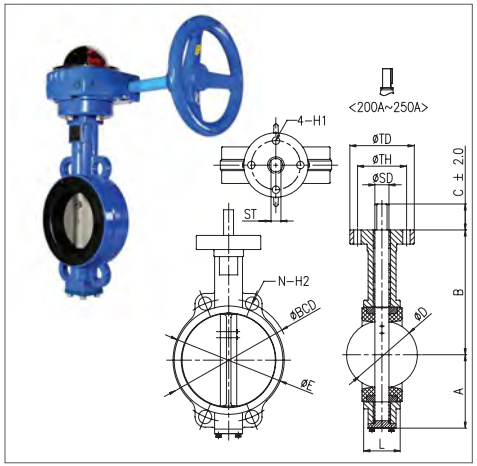

▣ GC200/GCD450 Body

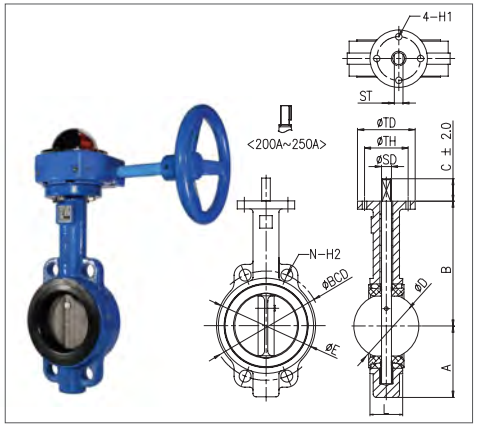

▣ Dimension (Bare Shaft, 50mm ~ 250mm)

(Unit: mm)

Valve Size		A		B		C	D	E	L	H1	TH	TD	SD	ST	Connection 10K				Weight (kg)			
																			ALDC12		GC200/GCD450	
mm	inch	ALDC12	GC200/GCD450	ALDC12	GC200/GCD450										BCD	N	H2	Bolt	Bare Shaft	Gear Box Type	Bare Shaft	Gear Box Type
50	2	85	80	148	161	35	53	100.4	43	7	57	77	12.7	8	120	4	19	M16	1.4	2.9	2.5	4
65	2½	90	89	155	175	35	64.7	113	46	7	57	77	12.7	8	140	4	19	M16	1.7	3.2	3.2	4.7
80	3	98	95	160	181	35	78.8	128	46	7	57	77	12.7	8	150	4	19	M16	1.7	3.2	3.6	5.1
100	4	110	114	178	200	35	104	159	52	10.5	70	92	16	11	175	4	19	M16	2.9	4.4	4.9	6.4
125	5	130	127	190	213	35	123	191	56	10.5	70	92	19	13	210	4	23	M20	4.3	5.8	7	8.5
150	6	140	139	205	226	35	155.7	219	56	10.5	70	92	19	13	240	4	23	M20	5.3	6.8	7.8	9.3
200	8	175	175	240	260	55	202.5	271	60	14.5	89	115	22	-	290	4	23	M20	8.2	11.7	13.2	16.7
250	10	210	203	270	292	60	250.5	334	68	14.5	89	115	28.5	-	355	4	25	M22	13.4	16.9	19	22.5

. Dimensions are subject to change without notice. / Face-to-Face dimensions(L) are in accordance with KS B 2813 Series 46 and API 609 category A.

※ Please contact us for specifications not listed above.

Concentric Butterfly Valve PS Series

PTFE Lined Seat Butterfly Valve

(PSW10-XX3)

The PTFE Lined Seat Butterfly Valve is a concentric butterfly valve that has a seat or disc coated with PTFE for special fluids. Due to the nature of PTFE material, it can be used under a maximum pressure of 6 kgf/㎠. The main material can be selected according to fluid characteristics. Please contact us for further technical information.

- **Body Type** | Wafer, Lugged
- **Size** | 50mm ~ 350mm (2" ~ 14")
- **Max. Pressure** | 6kgf/㎠
- **Temperature Range** | 0℃ ~ 150℃ (32℉ ~ 302℉)
- **Flange Connection** | KS/JIS 10K/16K/20K, ASME 150, PN 10/16

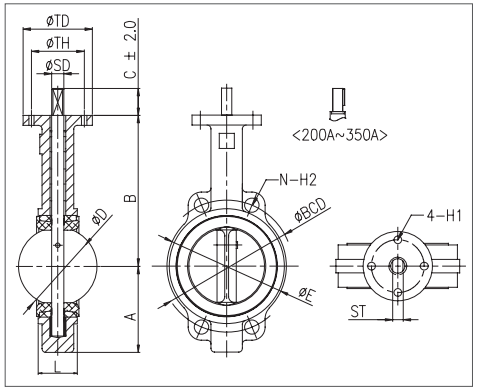

▣ Dimension (Bare Shaft, 32mm ~ 350mm)

(Unit: mm)

Valve Size		A	B	C	D	E	L	H1	TH	TD	SD	ST	Connection 10K				Connection 20K				Weight (kg)	
mm	inch												BCD	N	H2	Bolt	BCD	N	H2	Bolt	Bare Shaft	Gear Box Type
32	1¼	66	135	35	35	62	33	7	57	70	12.7	8	100	4	19	M16	100	4	19	M16	1.6	3.1
40	1½	70	150	35	42.4	76	33	7	57	77	12.7	8	105	4	19	M16	105	4	19	M16	2	3.5
50	2	80	161	35	53	100	43	7	57	77	12.7	8	120	4	19	M16	120	8	19	M16	2.5	4
65	2½	89	175	35	64.7	120	46	7	57	77	12.7	8	140	4	19	M16	140	8	19	M16	3.2	4.7
80	3	95	181	35	78.8	127	46	7	57	77	12.7	8	150	8	19	M16	160	8	23	M20	3.6	5.1
100	4	114	200	35	104	156	52	10.5	70	92	16	11	175	8	19	M16	185	8	23	M20	4.9	6.4
125	5	127	213	35	123	186	56	10.5	70	92	19	13	210	8	23	M20	225	8	25	M22	7	8.5
150	6	139	226	35	155.7	212	56	10.5	70	92	19	13	240	8	23	M20	260	12	25	M22	7.8	9.3
200	8	175	260	55	202.5	268	60	14.5	89	115	22	-	290	12	23	M20	305	12	25	M22	13.2	16.7
250	10	203	292	60	250.5	325	68	14.5	89	115	28.5	-	355	12	25	M22	380	12	27	M24	19	22.5
300	12	242	337	60	301	402	78	14.5	108	140	31.5	-	400	16	25	M22	430	16	27	M24	33	44
350	14	267	368	60	333.5	436	78	14.5	108	140	31.5	-	445	16	25	M22	480	16	33	M30	43	68.3

. Dimensions are subject to change without notice. / Face-to-Face dimensions(L) are in accordance with KS B 2813 Series 46 and API 609 category A.

※ Please contact us for specifications not listed above.

Concentric Butterfly Valve PS Series

PTFE Seat Butterfly Valve

(PSW10-X64)

The PTFE Seat Butterfly Valve has a disc, seal, and other parts composed of PTFE material. This butterfly valve is used for special fluids. Due to the nature of the PTFE material, it can be used at maximum pressures of 6 kgf/㎠ or less. Please contact us for further technical information.

- **Body Type** | Wafer
- **Size** | 50mm ~ 300mm (2" ~ 12")
- **Max. Pressure** | 6kgf/㎠
- **Temperature Range** | 0℃ ~ 150℃ (32℉ ~ 302℉)
- **Flange Connection** | KS/JIS 10K, ASME 150, PN 10/16

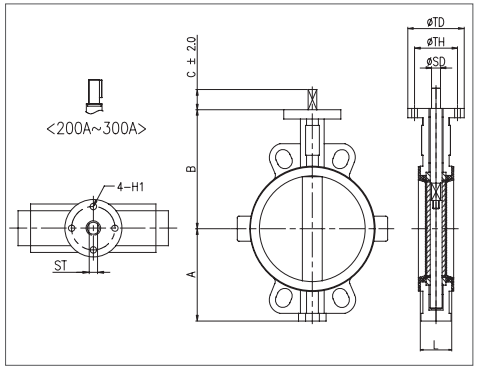

▣ Dimension (Bare Shaft, 50mm ~ 300mm)

(Unit: mm)

Valve Size		A	B	C	L	H1	TH	TD	SD	ST	Weight (kg)	
mm	inch										Bare Shaft	Gear Box Type
50	2	73	135	30	42	7	57	77	12.7	8	5	6.5
65	2½	80	135	30	45	7	57	77	12.7	8	7	8.5
80	3	90	138	30	46	7	57	77	12.7	8	9	10.5
100	4	116	159	30	52	10.5	70	92	16	11	13	14.5
125	5	130	179	30	55	10.5	70	92	19	13	15	16.5
150	6	148	188	30	56	10.5	70	92	19	13	24	25.5
200	8	180	230	45	61	14.5	89	115	22	-	38	41.5
250	10	220	270	45	66	14.5	89	115	28.5	-	60	63.5
300	12	255	300	45	77	14.5	89	115	28.5	-	70	81

. Dimensions are subject to change without notice. / Face-to-Face dimensions(L) are in accordance with KS B 2813 Series 46 and API 609 category A.

※ Please contact us for specifications not listed above.

Concentric Butterfly Valve PS Series

Pneumatic Actuator Butterfly Valve

Pneumatic Actuator Butterfly Valves are valves equipped with various pneumatic actuators and accessories from Jeongdo Machinery Co., Ltd. The Pneumatic Actuator Butterfly Valve is a custom made product. Please contact us for further details.

- **Body Type** — Wafer, Lugged, Grooved
- **Size** — 32mm ~ 1600mm (1 ¼"~ 64")
- **Max. Pressure** — 10/16/20kgf/㎠
- **Temperature Range** — 0℃ ~ 120℃ (32℉ ~ 248℉)
- **Flange Connection** — KS/JIS 10K/16K/20K, ASME 150, PN 10/16

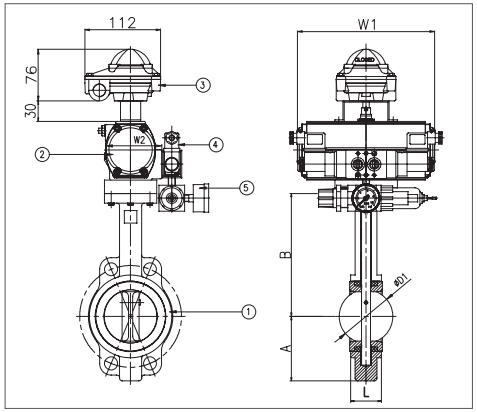

▣ Dimension

(Unit: mm)

Valve Size		A	B	C	D	E	L	AL	AH
mm	inch								
50	2	80	161	35	53	100	43	202	107
65	2½	89	175	35	64.7	120	46	202	107
80	3	95	181	35	78.8	127	46	202	107
100	4	114	200	35	104	156	52	253	126
125	5	127	213	35	123	186	56	253	126
150	6	139	226	35	155.7	212	56	311	148
200	8	175	260	55	202.5	268	60	311	148
250	10	203	292	60	250.5	325	68	390	174
300	12	242	337	60	301	402	78	390	174
350	14	267	368	60	333.5	436	78	431	192
400	16	297	400	57	389.6	488	102	506	216
450	18	315	422	57	440.5	539	114	605	284
500	20	348	480	65	491.6	593	127	605	284
600	24	444	562	70	592.5	816	154	605	284

. Dimensions are subject to change without notice. / Over the size 450mm are available.
. Face-to-Face dimensions(L) are in accordance with KS B 2813 Series 46 and API 609 category A.

▣ Component

① Butterfly Valve

② Pneumatic Actuator
- Single Acting
- Double Acting
- etc.

③ Limit Switch
- Standard type
- Explosion-proof type

④ Solenoid Valve
- ¼"
- etc.

⑤ Air Control Unit

※ Please contact us for specifications not listed above.

Concentric Butterfly Valve PS Series

Electric Actuator Butterfly Valve

Electric Motor Actuator Butterfly Valves are equipped with various electric motor actuators and accessories specific to Jeongdo Machinery Co., Ltd. butterfly valves. Pneumatic Actuator Butterfly Valves are custom made products. Please contact us for further details.

- **Body Type** — Wafer, Lugged, Grooved
- **Size** — 32mm ~ 1600mm (1 ¼"~ 64")
- **Max. Pressure** — 10/16/20kgf/㎠
- **Temperature Range** — 0℃ ~ 120℃ (32℉ ~ 248℉)
- **Flange Connection** — KS/JIS 10K/16K/20K, ASME 150, PN 10/16

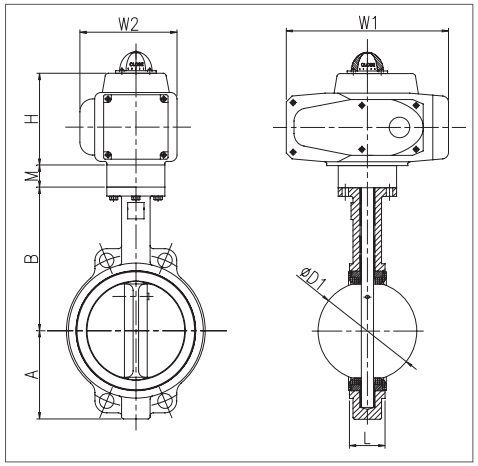

▣ Dimension

(Unit: mm)

Valve Size		A	B	D1	L	M	H	W1	W2
mm	inch								
50	2	80	161	53	43	45	113	159	104
65	2½	89	175	64.7	46	45	113	159	104
80	3	95	181	78.8	46	45	113	159	104
100	4	114	200	104	52	50	123	208	1222
125	5	127	213	123	56	50	123	208	122
150	6	139	226	155.7	56	50	146	256	153
200	8	175	260	202.5	60	80	146	256	153
250	10	203	292	250.5	68	80	146	256	153
300	12	242	337	301	78	85	158	280	156
350	14	267	368	333.5	78	85	158	280	156
400	16	297	400	389.6	102	85	158	280	156

. Dimensions are subject to change without notice. / Over the size 450mm are available. / Face-to-Face dimensions(L) are in accordance with KS B 2813 Series 46 and API 609 category A.

※ Please contact us for specifications not listed above.

Other Concentric Butterfly Valves

Butterfly Valve w/ Extension Gear Box

The extension gear box is used to operate a butterfly valve located at a lower level such as an underground tank. It is applicable to all PS Series.

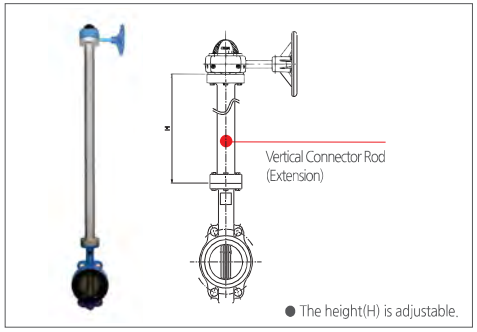

Butterfly Valve w/ Chain Gear Box

The chain gear box is used to operate a butterfly valve located at ceiling pipe height. It is applicable to all PS Series.

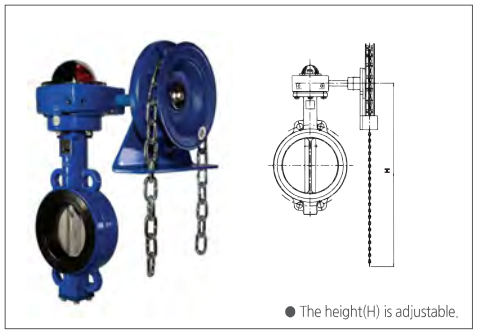

Lock Gear Box

The lock gear box is a device for preventing unauthorized operation of the valve. It is applicable to all PS series.

※ Please contact us for specifications not listed above.

Bolt & Nut for Valve Connection

D x L1/L2 x N

- D : Bolt Diameter
- L1/L2 : Bolt Length
- N : Bolt Quantity

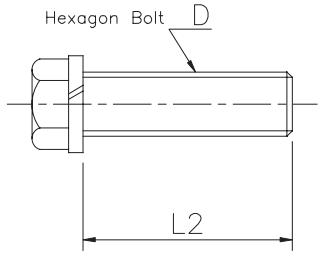

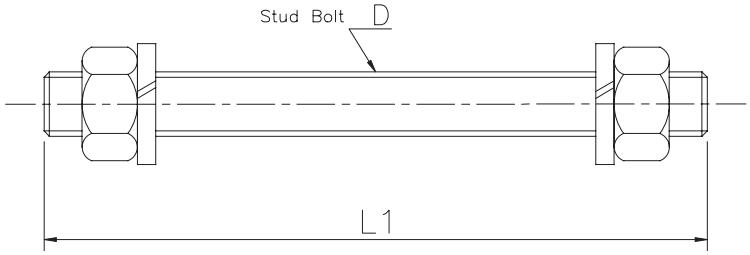

Valve Size		10K		20K	
		Stud Bolt	Hexagon Bolt	Stud Bolt	Hexagon Bolt
mm	inch	D x L1 x N	D x L2 x N	D x L1 x N	D x L2 x N
40	1½	M16 x 115 x 4	-	M16 x 120 x 4	-
50	2	M16 x 125 x 4	-	M16 x 130 x 8	-
65	2½	M16 x 130 x 4	-	M16 x 135 x 8	-
80	3	M16 x 130 x 8	-	M20 x 150 x 8	-
100	4	M16 x 140 x 8	-	M20 x 160 x 8	-
125	5	M20 x 160 x 8	-	M22 x 175 x 8	-
150	6	M20 x 160 x 8	-	M22 x 180 x 12	-
200	8	M20 x 165 x 12	-	M22 x 185 x 12	-
250	10	M22 x 180 x 12	-	M24 x 210 x 12	-
300	12	M22 x 190 x 16	-	M24 x 220 x 16	-
350	14	M22 x 195 x 16	-	M30 x 240 x 16	-
400	16	M24 x 230 x 16	-	M30 x 280 x 16	-
450	18	M24 x 245 x 20	-	M30 x 295 x 16	-
500	20	M24 x 255 x 20	-	M30 x 310 x 16	-
600	24	M30 x 305 x 20	M30 x 75 x 8	M36 x 360 x 20	M36(P3) x 95 x 8

Installation

Butterfly Valve Installation Instructions

Step 1

Insert Valve

Insert the valve carefully with the flange spacing open and the disc slightly open.

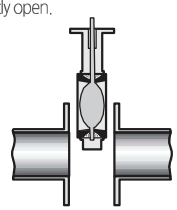

Step 2

Adjust Valve Position

Align the valve with the piping with the disc slightly open.

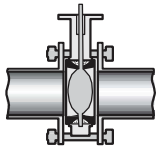

Step 3

Tighten Flange Bolt

After adjusting the valve position, tighten the flange bolt with the disc fully opened.

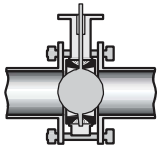

* Please Do not use gasket

Installation Precautions

Be sure to check if the flange gap is wide enough before inserting the valve.

When inserting the valve, if the flange gap is not wide enough, seat tearing may occur. If the disc is inserted fully opened, the edge of the disc may collide with the flange and result in disc scratching.

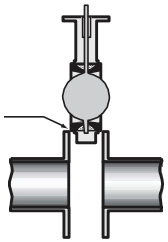

Be sure to check if the disc is slightly open before adjusting the valve position.

If the valve position is adjusted while the disc is completely closed, the seat may be crushed or may swell to the side, causing excessive torque.

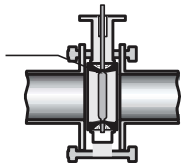

Be sure to align the flange and the valve before tightening the flange bolt.

If the flange bolt is tightened while the flange and valve are not aligned, there will be a gap between the edge of the disc and the flange surface, which may cause leakage and excessive torque on the valve.

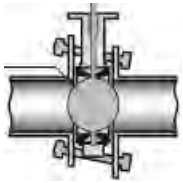

Be sure to weld the flange to the pipe before installing the valve.

If welding is performed with the valve and flange fastened, there is a high risk of leakage due to damage to the seat caused by slag or spatter.

Cv (Flow Coefficient)

Cv (flow coefficient) of a device is a relative measure of its efficiency at allowing fluid flow. It describes the relationship between the pressure drop across the valve and the corresponding flow rate.

Valve Size		% of Opening									
mm	inch	100	90	80	70	60	50	40	30	20	10
50	2	100	85	67	51	37	25	16	10	5	1.8
65	2½	170	145	114	87	63	43	27	16	8	3.1
80	3	290	247	194	148	107	73	46	28	22	9
100	4	650	451	355	270	196	133	85	50	24	9.5
125	5	860	731	576	439	318	215	138	82	39	15
150	6	1270	1080	851	648	470	318	203	121	57	23
200	8	2550	2170	1710	1300	944	638	408	242	115	46
250	10	4020	3420	2690	2050	1490	1005	643	382	181	72
300	12	6090	5180	4080	3110	2250	1520	974	579	274	110

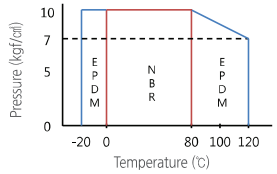

Seat Material Character

Chemical Name	Abbreviation		Temperature Range
	DIN / ISO 1629	ASTM D-1418	
Polyacrylate Rubber	ACM	ACM	-10℃ ~ 150℃
Ethylene Propylene Diane Monomer	EPDM	EPDM	-20℃ ~ 120℃
Polytetrafluoroethylene (Teflon)	PTFE	PTFE	-20℃ ~ 250℃
Fluorocarbon rubber (Viton)	FPM	FKM	-10℃ ~ 120℃
Butadiene Rubber	BR	BR	-40℃ ~ 100℃
Isobutene Isoprene Rubber(Butyl Rubber)	IIR	IIR	-50℃ ~ 100℃
Isoprene Rubber	IR	IR	-20℃ ~ 80℃
Nitrile Butadiene Rubber	NBR	NBR	-20℃ ~ 80℃
Natural Rubber	NR	NR	-20℃ ~ 60℃
Styrol Butadiene Rubber	SBR	SBR	-40℃ ~ 80℃
Fluorosilicone Rubber	FVMQ	FVMQ	-50℃ ~ 175℃
Methyl Vinyl Silicone Rubber	VMQ	VMQ	-50℃ ~ 200℃

‘Unparalleled Performance
High Professionalism
Reliable After-Sales Service’

Product Code

Figure					Material			Operator		Size				

Series
PS : PS Series
PH : PH Series

Body Type
W : Wafer
L : Lugged
F : Flanged
J : Semi-Lugged
G : Grooved

Rating
0 : KS/JIS 10K
1 : KS/JIS 16K
2 : KS/JIS 20K
3 : ASME 150
4 : ASME 300

Structure
1 : Concentric
2 : Double Eccentric
3 : Triple Eccentric

Body
0 : GC200
1 : GCD450
2 : ALDC12
3 : SSC13
4 : SSC14
5 : SSC16
6 : SCPH2

Disc
2 : SSC13(Buffing)
3 : SSC13
4 : SSC14
5 : SSC16
6 : PTFE+SSC13
7 : PTFE(Coated)

Seat
0 : EPDM
1 : EPDM(Water)
2 : NBR
3 : PTFE(Lined)
4 : PTFE
5 : RTFE
6 : 316SS

Operator
GB : Gear Box
LV : Lever
SL : SUS Lever
EM : Electric Motor Actuator
PN : Pneumatic Actuator
CG : Gear Box Chain
BA : Bare(No Operators)
GT : Gear Box with Limit Switch
LT : Lever with Limit Switch
CT : Chain with Limit Switch
EG : Extension Gear Box

Size
0040A : 40mm
0050A : 50mm
0065A : 65mm
0080A : 80mm
0100A : 100mm
0125A : 125mm
0150A : 150mm
0200A : 200mm
0250A : 250mm
0300A : 300mm
⋮
1600A : 1600mm

Jeongdo Machinery
‘Concentric Butterfly Valve’

customer

SAMSUNG ELECTRONICS | LG Electronics | SK hynix | HYUNDAI MOTOR GROUP | SAMSUNG DISPLAY
SAMSUNG C&T | SAMSUNG ENGINEERING | LG Display | SEOUL SEMICONDUCTOR | LOTTE ENGINEERING & CONSTRUCTION CO., LTD.
KCC건설 | GC녹십자 | CJ CHEILJEDANG | olleh kt | LG U+
Incheon Airport | PARADISE CITY | posco | HYUNDAI STEEL | 세브란스병원
한화건설 | HDC | 대림산업 | DOOSAN | LG Chem
LH | SH CORPORATION | GS E&C Corporation | It's Possible DAEWOO E&C | stx Shipbuilding

2018.06

JEONGDO
Machinery Co., Ltd.

www.jdvalve.co.kr

10047 121, Hwanggum 2-ro, Yangchon-eup, Gimpo-si, Gyeonggi-do, Rep. of KOREA
Tel 031-986-4309 Fax 031-986-4308 E-mail jeongdo@jdvalve.co.kr
© 2018 JEONGDO MACHINERY Co., Ltd. All Rights Reserved.

Because of product discontinuation, error rectification, new products, or any other reason that Jeongdo Machinery Co., Ltd. considers necessary, products may be subject to change without prior notice. The published data may be subject to revision without prior notice. Content within this catalog in its entirety is protected by copyright, and any unauthorized reproduction of such content is strictly prohibited.